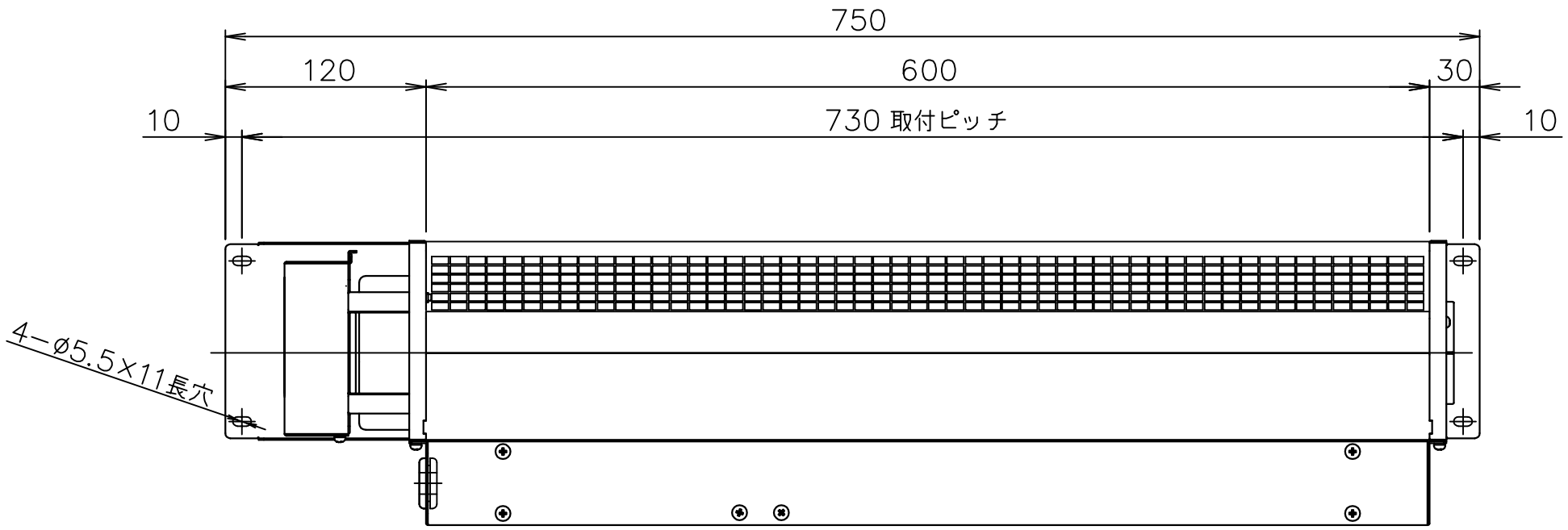

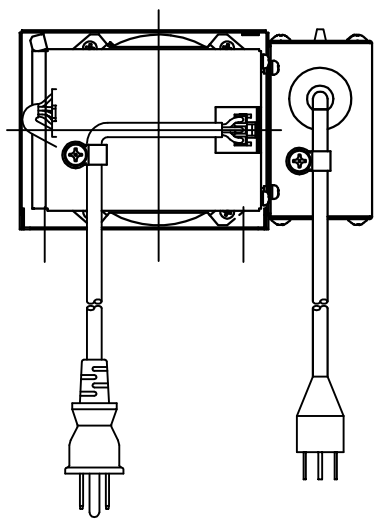

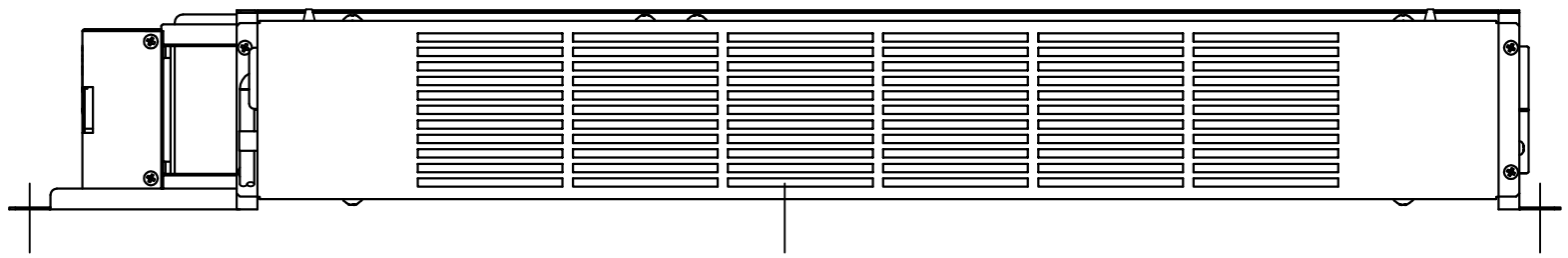

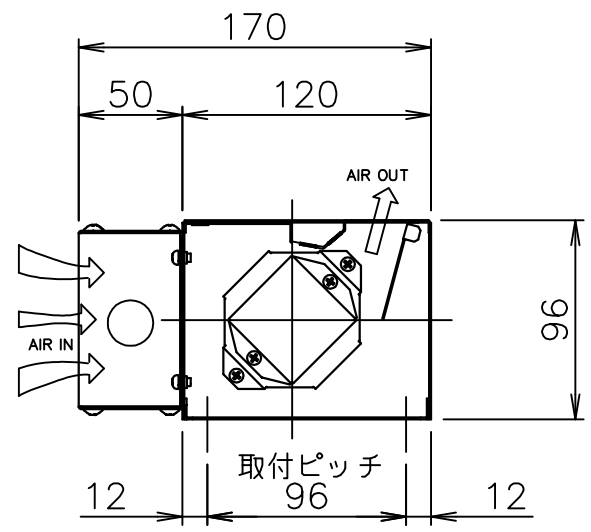

FB−060060−10DAH